GENSET RELAY & CONTROL PANEL
LOCATION :- FIRST FLOOR 110KV SUBSTATION

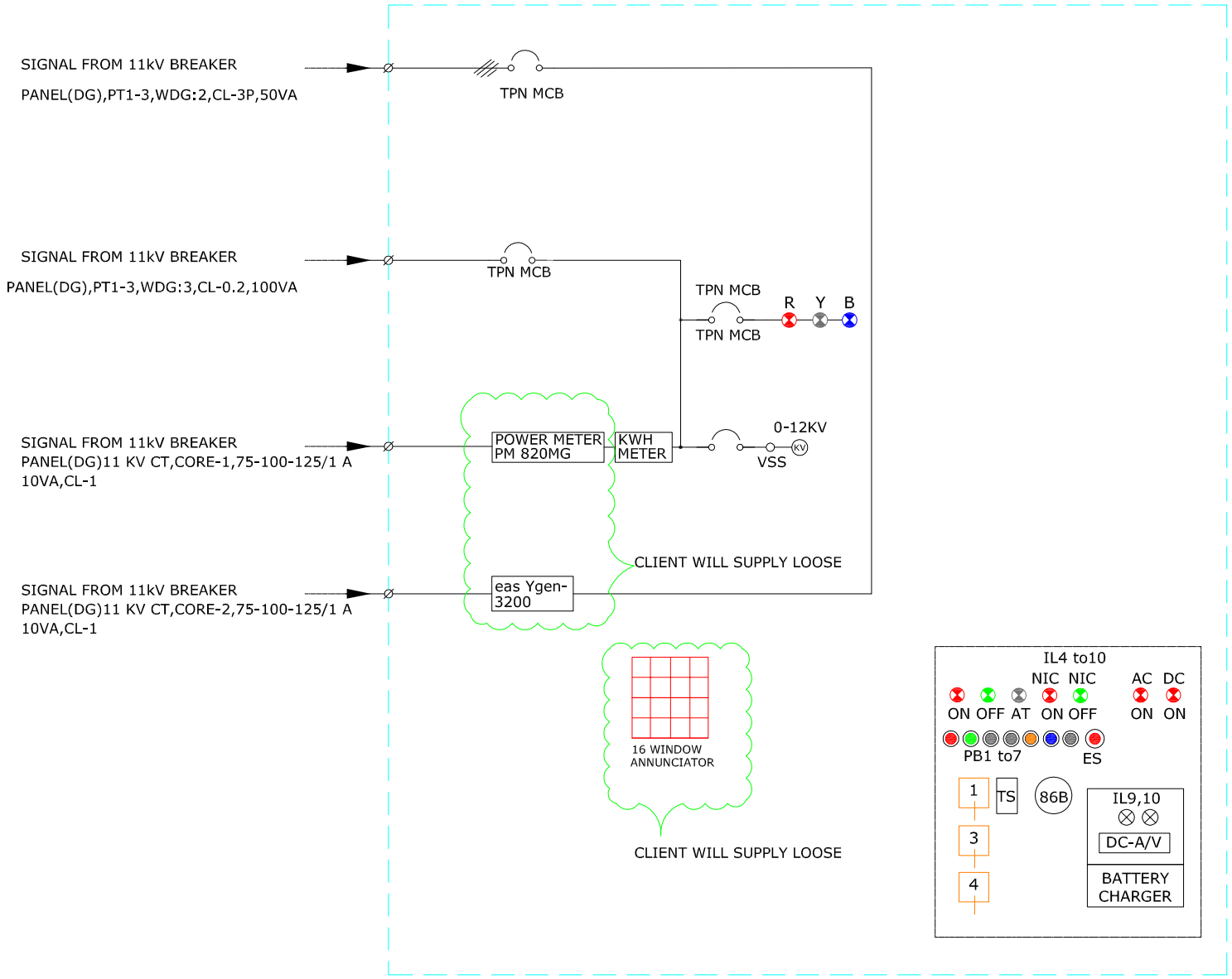

LEGEND:

	CURRENT TRANSFORMER (FIGURE INDICATES NO. OF CTs)
R Y B	R-Y-B INDICATING LAMPS (IL-1 TO 3)
	EMERGENCY PUSH BUTTON
	VOLTAGE TRANSFORMER
PM	POWER METER
	3 CORE CT POTENTIAL TRANSFORMER
	2 CORE CT POTENTIAL TRANSFORMER
	DISTRIBUTION TRANSFORMER
A V	AMMETER , VOLTMETER
	FUSE
1	TRIP/NEUTRAL/CLOSE SWITCH
	MCB
	CABLE TERMINATION
TCH	TRIP CIRCUIT HEALTHY INDICATION
CC	CLOSING COIL
TC	TRIPPING COIL
SCM	SPRING CHARGING MOTOR (BLUE COLOUR)
ON	BREAKER ON INDICATION (IL-4 RED COLOUR)
OFF	BREAKER OFF INDICATION (IL-5 GREEN COLOUR)
AT	AUTO TRIP INDICATION (IL-6AMBER COLOUR)
DCF	DC SUPPLY FAIL INDICATION
ACON	AC SUPPLY ON INDICATION
A V	AMMETER VOLTMETER

INSTRUMENTATION

A	AMMETER
ASS	AMMETER SELECTOR SWITCH
V	VOLTMETER
VSS	VOLTMETER SELECTOR SWITCH
DLM	DIGITAL LOAD MANAGER
EDO	ELECTRICAL DRAW OUT
MDO	MANUAL DRAW OUT
EPB	EMR. PUSH BUTTON
WTI	WINDING TEMPERATURE INDICATOR
OTI	OIL TEMPERATURE INDICATOR
BR	BUCHHOLZ RELAY
MOLG	MAGNETIC OIL LEVEL GAUGE
PRV	PRESSURE RELIEF OF VALVE
LM	LOAD MANAGER WITH HIGH DEMAND ALARM
RPRR	RAPID PRESSURE RISE RELAY
RTCC	REMOTE TAP CHANGING CUBUCLE
ARV	AUTOMATIC VOLTAGE RELAY
NGR	NEUTRAL GROUNDING RELAY
CT	CURRENT TRANSFORMER
NIC	NEUTRAL ISOLATING CONTACTOR
CTTB	CT TERMINAL BLOCK
ETB	EXTERNAL TERMINAL BLOCK
NL	NEUTRAL LINK
CC	CLOSING COIL
OC	OPENING COIL
IPB	ILLUMINATED PUSH BUTTON
BC	BATTERY CHARGER
PB1	ENGINE START
PB2	ENGINE STOP
PB3	ENGINE RESET
PB4	GCU RESET
PB5	ALARM TEST
PB6	ALARM RESET
PB7	ALARM ACCEPT

1	BREAKER CONTROL SWITCH
2	AUTO-MANUAL SWITCH
3	DG VOLTAGE RAISE/LOW SWITCH
4	DG SPEED RAISE/LOW SWITCH
21	DISTANCE PROTECTION RELAY
25	UNDER VOLTAGE RELAY
27	UNDER VOLTAGE RELAY/NO VOLTAGE RELAY
32	REVERS POWER RELAY
40	LOSS OF EXITATION
49 O	OIL TEMPERATURE INDICATOR
49 W	WINDING TEMPERATURE INDICATOR
50 N	INST. OVER CURRENT EARTH FAULT RELAY
50	INST. OVER CURRENT RELAY
50LBB	BREAKER PROTECTION RELAY
51	IDMT OVER CURRENT RELAY
51N	IDMT EARTH FAULT RELAY
51NS	STAND-BY EARTH FAULT RELAY
51V	VOLTAGE RESTRAINED OVER CURRENT RELAY
59	OVER VOLTAGE RELAY
63 O	OIL SURGE RELAY FOR OLTC
63 T	BUCHHOLLZ RELAY
63 X	PRESSURE RELIEF VALVE
64R	RESTRICTED EARTH FAULT RELAY
67	DIRECTION PHASE OVER CURRENT RELAY
67 N	DIRECTION EARTH FAULT RELAY
74	ALARM RELAY
78	OUT OF STEP (POLE SLIP FUNCTION)
81	UNDER FREQUENCY RELAY
86	MASTER TRIPPING RELAY
87 G	GENERATOR DIFFERENTIAL RELAY
87 B	BUSBAR PROTECTION RELAY
87 L	CABLE DIFFERENTIAL PROTECTION RELAY
87 T	TRANSFORMER DIFFERENTIAL RELAY
94	ANTI PUMPING RELAY
95	TRIP CIRCUIT SUPERVISION RELAY
97	PT FUSE FAILLURE RELAY
95/86	SUPERVISION RELAY FOR MASTER TRIPPING RELAY

GENSET RELAY & CONTROL PANEL

1.	SYNCHRONIZATION BETWEEN DG SETs SHALL BE DONE ON MAIN BUS OF PANEL .
2.	SYNCHRONIZATION OF BETWEEN DG SET SHALL BE DONE ON MAIN HT PANEL BUS. VENDOR SHALL CONSIDER THE SYNCHRONIZATION MODULE OF "WOODWARD" MAKE FOR SYNCHRONIZATION AND ENERGY MANAGEMENT
3.	LVM SIGNAL SHALL BE AVAILABLE FROM EB INCOMER FOR D.G. START COMMAND DURING EB FAILLURE.
4.	REMOTE START FROM THE DG SHOULD BE CONNECTED TO NEGATIVE TERMINAL AND SHALL BE SEPARATE FOR INDIVIDUAL D.G.SET.
5.	DG SETs VCB IN SYNCHRONIZATION PANEL TRIP (O/C & S/C Trip) SIGNAL WILL BE GIVEN TO CONTROLLER TO TRIP THE ENGINE .
6.	NEUTRAL CT IN ALTERNATOR SHALL BE SUPPLIED BY PANEL SUPPLIER SIGNAL HAS TO BE GIVEN TO ENGINE FROM THE 51G TO TRIP THE ENGINE.
7.	PANEL SUPPLIER TO CONSIDER AUXILARY RELAYS FOR READY TO LOAD , VCB CLOSE , VCB TRIP/OPEN , COMMON SHUTDOWN , COMMON WARNING, CRANKING FOR EACH DG SETS TO START FROM ENGINE CONTROL PANEL
8.	EMERGENCY STOP PUSH BUTTON OF ENGINE SHALL BE PROVIDED IN DG INCOMER IN RESPECTIVE SETs IN SYNCHRONIZATION PANEL TO STOP THE SETs IN EMERGENCY CONDITION.
9.	FOR LOAD MANAGEMENT -PLC CONTROLLER WILL BE USED FOR LOAD MANAGEMENT FACILITY AND LOAD MANAGEMENT SHALL COME INTO PICTURE AFTER 5 MINUTES RUNNING OF SOURCES AND IT WILL SHUT DOWN SOURCE IF LOAD IS LESS THAN PRE-DETERMINED VALUE. (PLC WILL BE IN SCOPE OF ELECTRICAL CONTRACTOR AND WILL INSATLL IN MAIN HT PANEL)
10.	MASTER/SLAVE DG.SETs ARE PERIODICALLY INTERCHANGEABLE.
11.	GENERATOR CONTROL UNIT SHALL BE "WOOD WARD" MAKE AND MODEL IS easYgen 32 CONSIDERING LOAD MANAGMENT.
12.	ENERGY MANAGEMENT SYSTEM SHALL BE PROVIDED - ALL THE ENERGEY METERS , LOAD MANAGER SHALL BE TO PLC/SCADA SYSTEM AND SHALL BE SUPPLIED SEPARATELY AND IN SCOPE ELECTRICAL CONTRACTOR
13.	AUTO CHANGE OVER AND ENERGEY MANAGMENT SHALL BE PROVIDED USING PLC
14.	DG SUPPLIER WILL SUPPLY ONLY DG Sets , NGR PANEL , RELAY AND CONTROL PANEL AS PER SLD & ITS ACCESSORIES, ELECTRICAL CONTRACTOR TO CO-ORDINATE WITH DG SUPPLIER AND COMPLETE DG RELATED & SYNCHRONIZATION RELATED ELECTRIFICATION UNDER THE SUPERVISION AND GUIDANCE OF DG SUPPLIER LIKE INSTALLATION OF CABLEs , TERMINATION OF CABLE PROGRAMMING OF CONTROLLER INSTALLED IN , MAIN HT PANEL ETC. COMMISSIONING AND TESTING OF THE MAIN HT PANEL & SYNCHRONIZATION of DG SETs ARE COMBINED RESPONSIBILITY OF DG SUPPLIER AS WELL AS ELECTRICAL CONTRACTOR
15.	DG SUPPLIER TO SUPPLY CONTROL AND RELAY PANEL AS PER SLD , SOME OF THE INSTRUMENT ELECTRICAL CONTRACTOR WILL SUPPLY LOOSE , BUT IT WILL INSTALL IN RELAY & CONTROL PANEL.

Rev.	Date	Changed	Checked	Kind of revision	No. Of Prints	Date	Issued To
01.	21.07.2014	BAKD	VNIR	REVISED AS PER CLIENT COMMENTS			

File name :
Originated From Drg. No :

Project:
INTEGRATED VACCINES COMPLEX ,
HLL BIOTECH LIMITED

Project No.: 120310
Location CHENGALPATTU

Description:
GENSET RELAY & CONTROL PANEL

nne pharmaplan
NNE Pharmaplan India Limited
14, Achlah Shetty Layout,
Bangalore - 560 080. INDIA

	Date	Name
Drawn	23.06.2014	BAKD
Checked	23.06.2014	VNIR
Approved	23.06.2014	VNIR
Scale-NTS	Units : mm	Size : A2
Drawing no: NPI/120310/ELC(SLD)/U2/09		Rev. 01

THE INFORMATION CONTAINED HEREIN IS CONFIDENTIAL AND NOT FOR PUBLICATION. BEING THE PROPERTY OF NNE PHARMAPLAN INDIA LIMITED, THE INFORMATION IS ISSUED ON THE UNDERSTANDING THAT NO PART THERE OF SHALL BE COPIED OR COMMUNICATED TO A THIRD PARTY WITHOUT AUTHORISATION IN WRITING FROM NNE PHARMAPLAN INDIA LIMITED.