Item Code: 1212210025

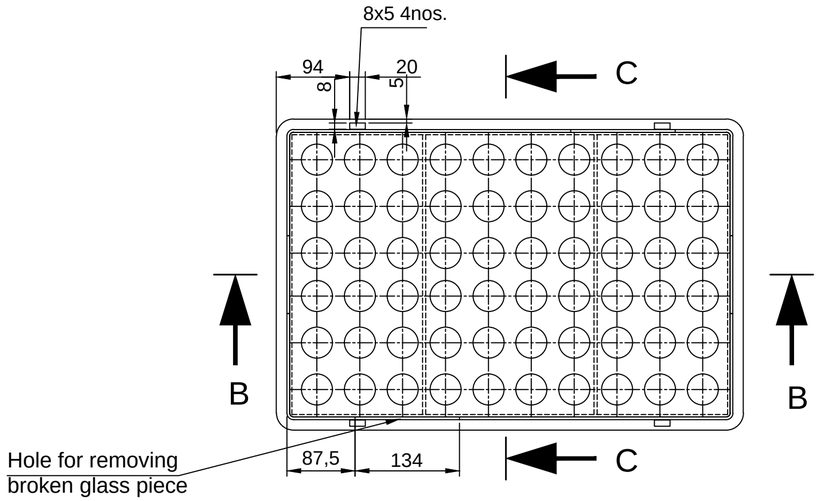

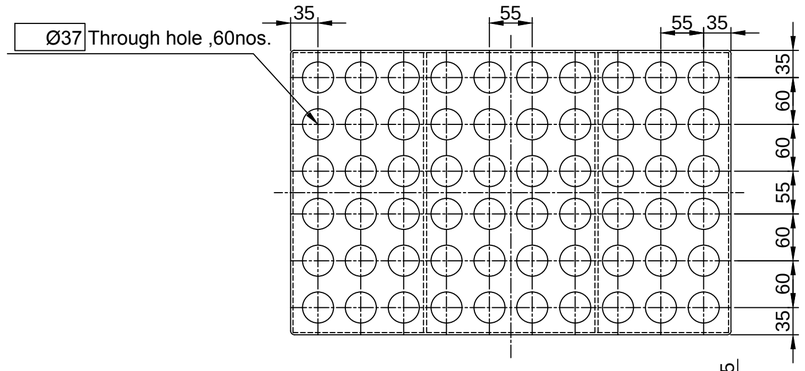

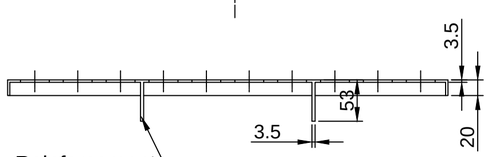

DETAIL-A

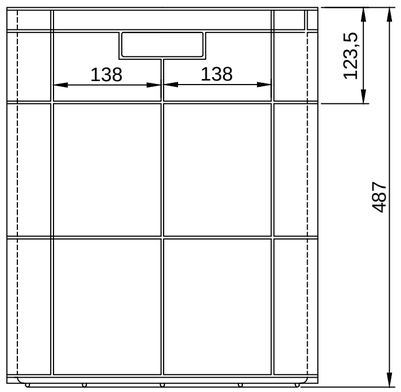

Side view without section

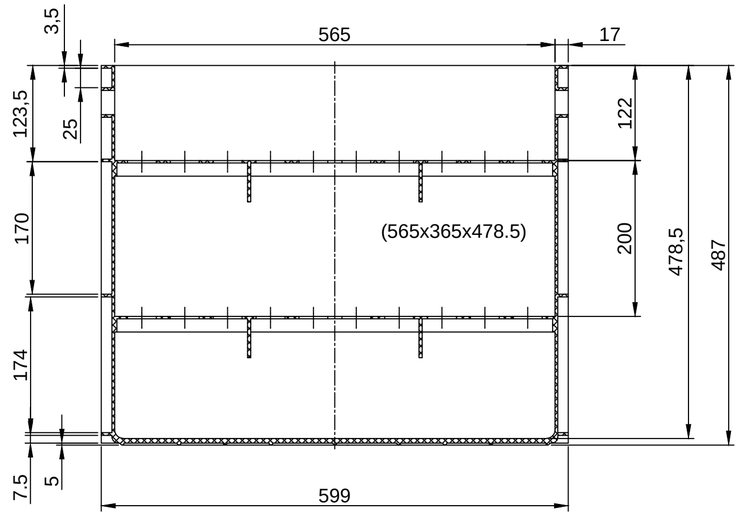

SEC.- BB(Front view)

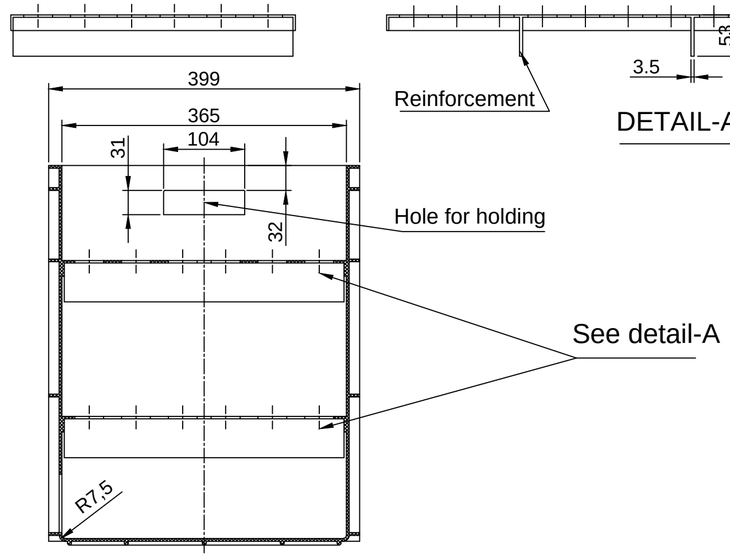

SEC. -CC(Side view)

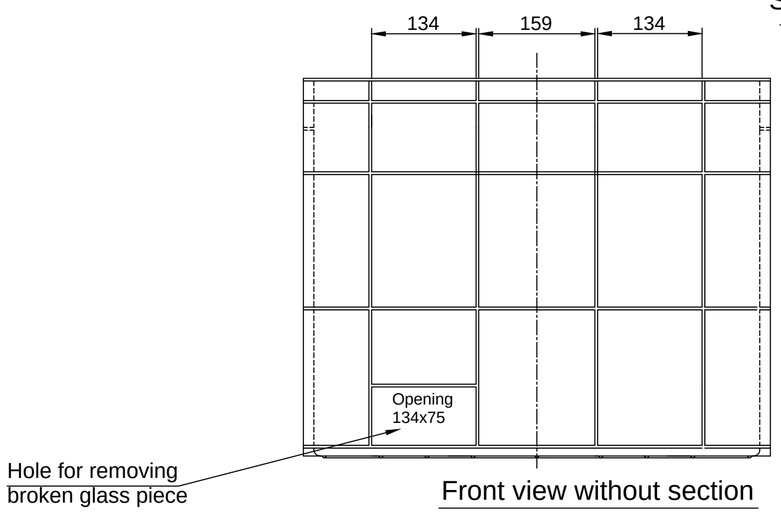

Front view without section

BRAND NAME:- NILKAMAL / EQUIVALENT

MATERIAL: PVC	HLL LIFECARE LIMITED Thiruvananthapuram-5		NO:OFF.
DRAWN BY:	M.P. PAUL	TITLE:- CRATE FOR STORAGE OF GLASS MOULD	
CHECKED BY:			
APPROVED BY:			
DATE:	14-12-04.	Drg .no:- HLL-B-174-00	
SCALE:			
ALL DIMENSIONS ARE IN M.M		SHEET.NO:-1OFF.1	REV:- DATE:-