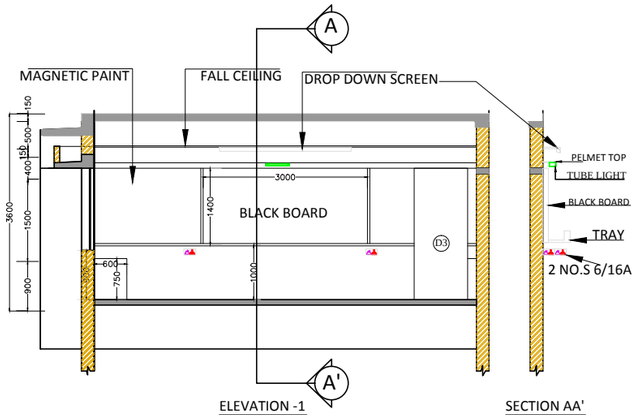

ELEVATION -1

SECTION AA'

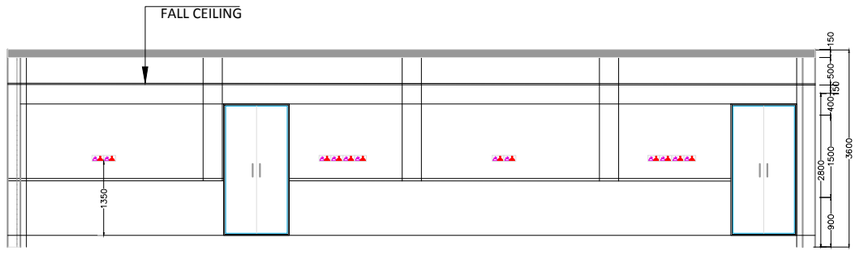

ELEVATION -2

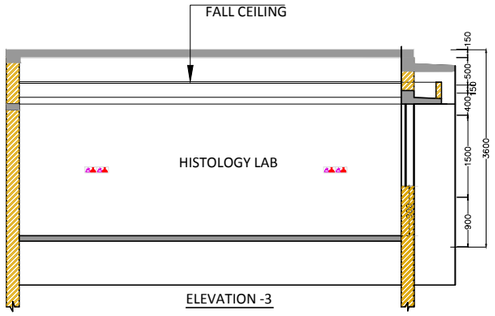

ELEVATION -3

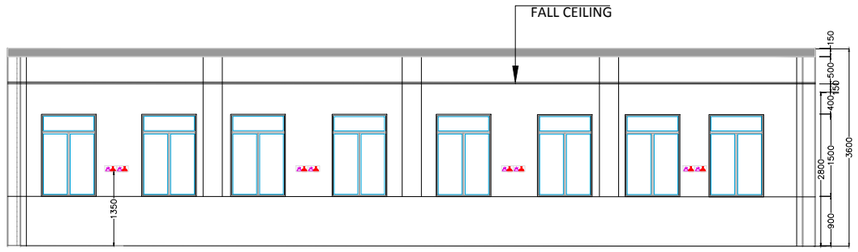

ELEVATION -4

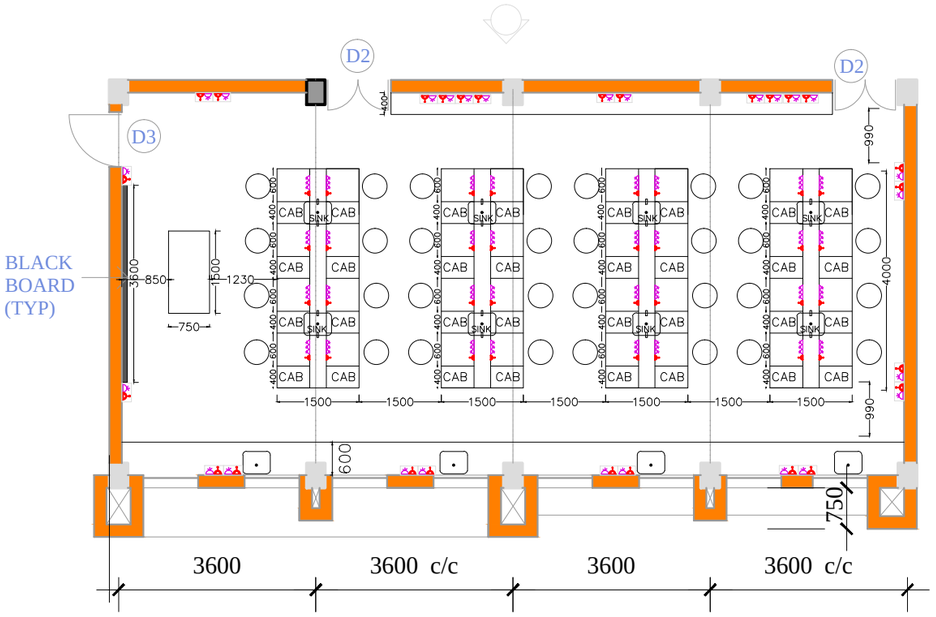

PLAN

SYM.	DESCRIPTION	QTY
	6A SWITCHED SOCKET (RAW)	24
	16A SWITCHED SOCKET	08
	6/16A SWITCHED SOCKET	26
	36 W TUBE LIGHT	01

R E V I S I O N S

NOS.	DATE	DESCRIPTION	DWN	CKD.
R0	11-03-16		RAHUL	AR.SAMANTH
R1	11-06-16		MANOJ	PCE

CONSULTANTS:

HITES
HLL INFRA TECH SERVICES LTD

(A fully owned subsidiary of HLL Lifecare Ltd.)
(A Government of India Enterprise)
THIRUVANANTHAPURAM-6
TEL: 0471-2365872, 2365873
FAX: 0471- 2368144
web : www.lifecarehll.com

PROJECT TITLE

RENOVATION OF LAB COMPLEX
AT
JIPMER ,KARAIKKAL
TENDER DRAWING

DRAWING TITLE

TYPICAL LAB

ELE-POWER LAYOUT

DATE: 11 - 06 - 2016

SCALE :- NTS

DRG. NO:

HLL/IDD/JIPMER/GNM/KRKL/2015-16/A15

ARCHITECT

NOTE

1. ALL DIMENSIONS ARE IN MILLIMETRES
2. DO NOT SCALE THE DRAWING
3. DISCAIMER :THESE DRAWINGS ARE THE SOLE PROPERTY OF HLL LIFECARELTD. NO CHANGES OR COPIES CAN BE MADE WITHOUT CONSENT